POWER SUPPLY

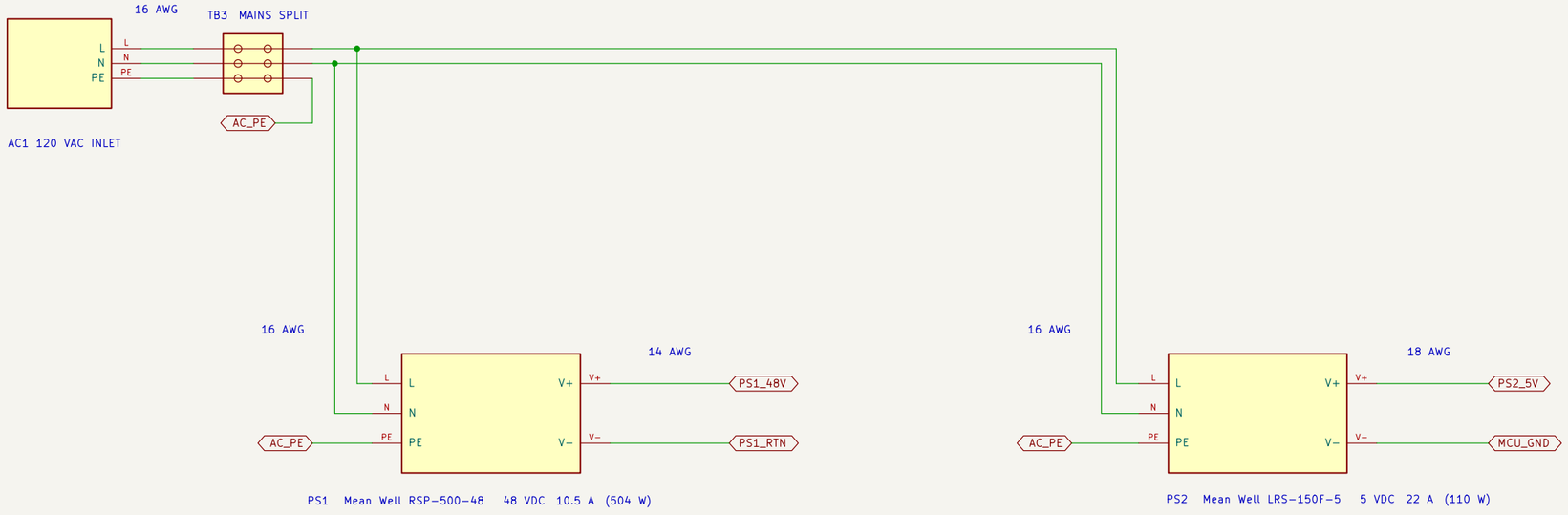

48 VDC Distribution

File: power−48v.kicad_sch

5 V Distribution

File: power−5v.kicad_sch

Playfield Switch Matrix

File: switch−matrix.kicad_sch

Solenoid Driver − 8 Channels

File: solenoid−drivers.kicad_sch

Arduino Mega 2560 − Pin Assignment

File: solenoid−mcu.kicad_sch

LED Controller

File: led−controller.kicad_sch

Playfield Wiring − Coils and Diodes

File: solenoid−wiring.kicad_sch

Arduino Interface Circuits

File: solenoid−io.kicad_sch

Mega I/O Shield

File: mega−io−shield.kicad_sch

Back−Edge Connector Board

File: connector−board.kicad_sch

One mains feed, two isolated DC supplies, separate returns

Pinball Machine Capstone

Sheet: /

File: pinball−machine−v2.kicad_sch

Title: Power Supply

Size: A3	Date: 2026−09−10	**Rev: A**
KiCad E.D.A. 10.0.0		Id: 1/12

48 VDC DISTRIBUTION

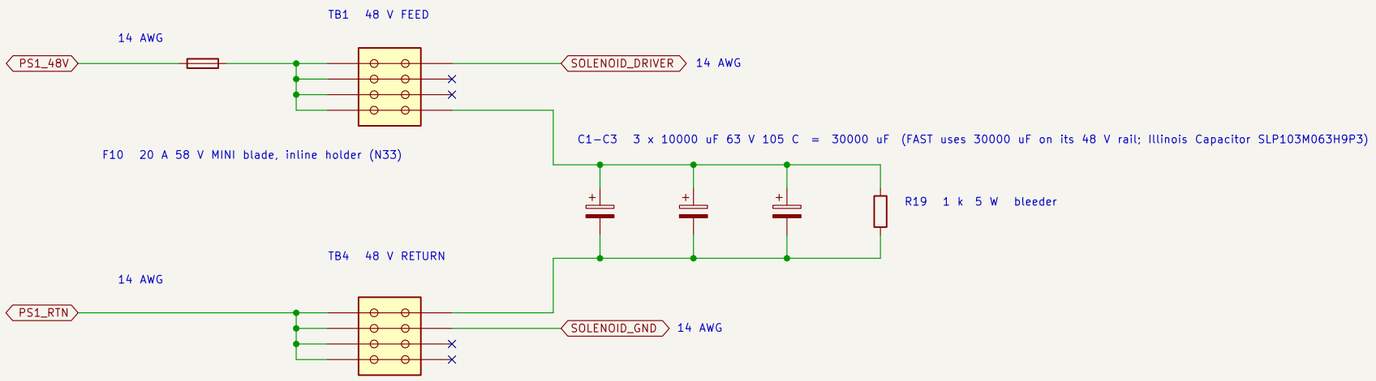

Fused feed, bulk bank and the terminal block that supplies the driver board

Pinball Machine Capstone

Sheet: /48 VDC Distribution/		
File: power–48v.kicad_sch		
Title: 48 VDC Distribution		
Size: A3	Date: 2026–09–10	**Rev: B**
KiCad E.D.A. 10.0.0		Id: 3/12

CHANNEL MAP (channel = MPF coil number + 1)

One board: 1 FLIPPER_L 2 FLIPPER_R 3–5 BUMPER_1–3 6 spare 7 SLING_L 8 SLING_R

The board as built is the Altium Solenoid–Driver project (its P1 logic header: FIRE1–8 on pins 1–8, MCU_GND on 9–10).

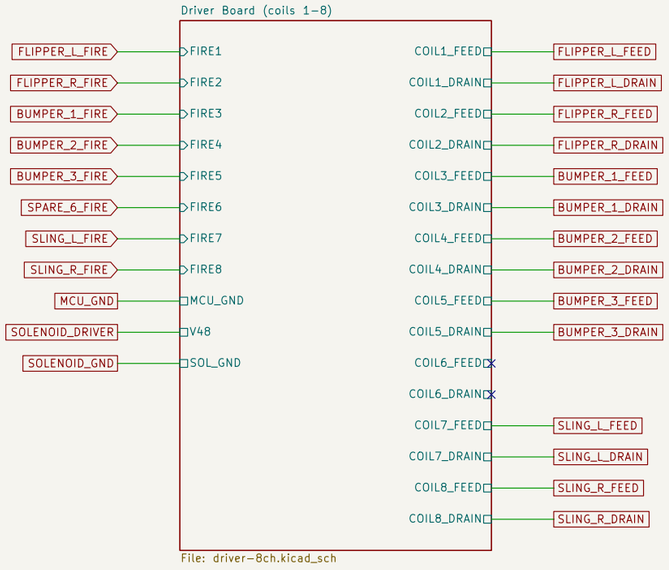

FIRE and coil nets use the names in the MCU and playfield wiring sheets

One instance of driver–8ch.kicad_sch (the built board: Altium Solenoid–Driver)

Pinball Machine Capstone

Sheet: /Solenoid Driver – 8 Channels/

File: solenoid–drivers.kicad_sch

Title: Solenoid Driver – 8 Channels

Size: A3	Date: 2026–09–19	**Rev: B**
KiCad E.D.A. 10.0.0		Id: 4/12

8-CHANNEL SOLENOID DRIVER (one board, coils 1-8; channel 6 spare)

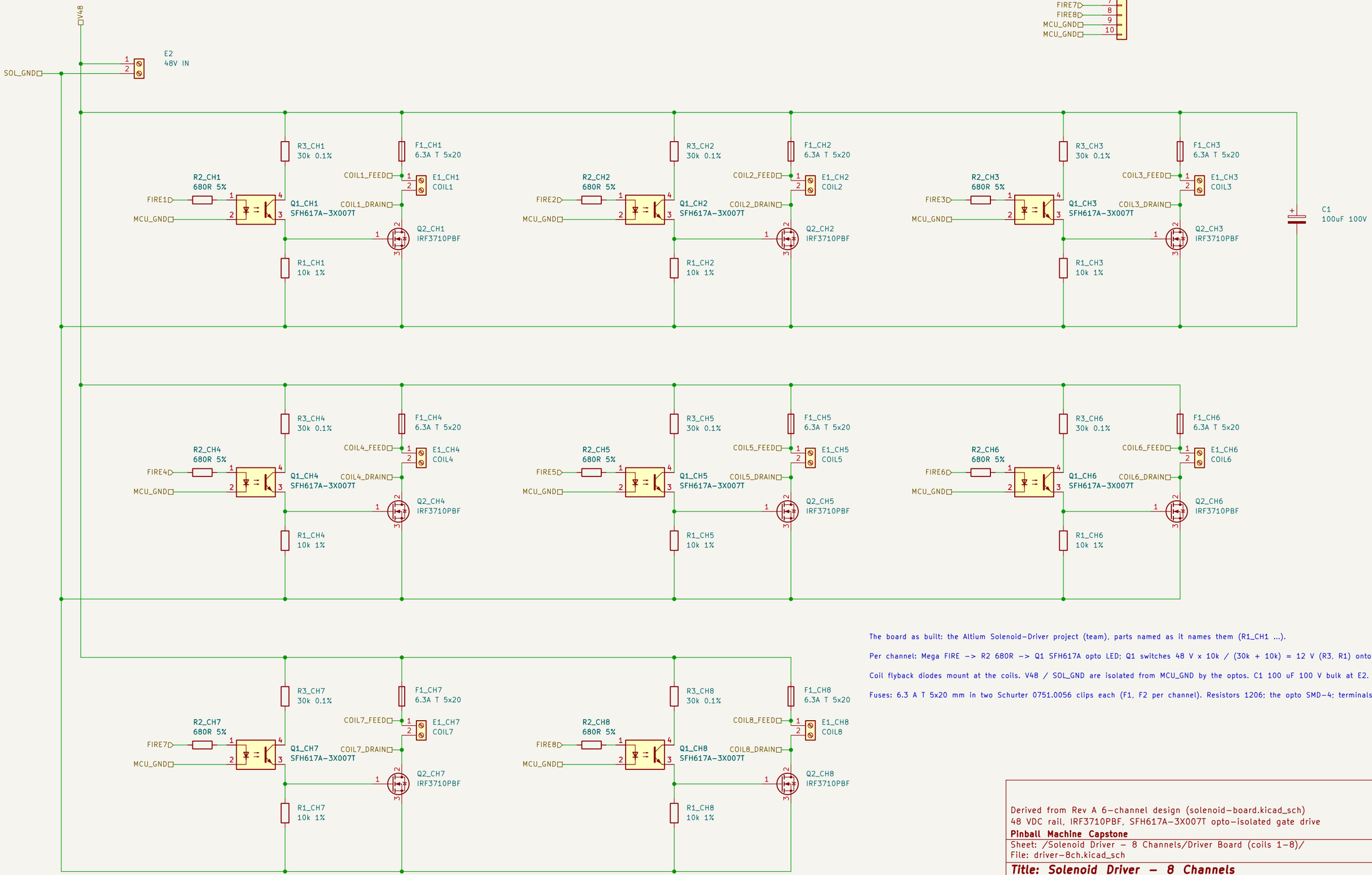

The board as built: the Altium Solenoid-Driver project (team), parts named as it names them (R1_CH1 ...).

Per channel: Mega FIRE -> R2 680R -> Q1 SFH617A opto LED; Q1 switches 48 V x 10k / (30k + 10k) = 12 V (R3, R1) onto the gate of Q2, an IRF

Coil flyback diodes mount at the coils. V48 / SOL_GND are isolated from MCU_GND by the optos. C1 100 uF 100 V bulk at E2.

Fuses: 6.3 A T 5x20 mm in two Schurter 0751.0056 clips each (F1, F2 per channel). Resistors 1206; the opto SMD-4; terminals Weidmueller PM 5.08.

Derived from Rev A 6-channel design (solenoid-board.kicad_sch)
48 VDC rail, IRF3710PBF, SFH617A-3X007T opto-isolated gate drive
Pinball Machine Capstone

Sheet: /Solenoid Driver - 8 Channels/Driver Board (coils 1-8)/
File: driver-8ch.kicad_sch

Title: Solenoid Driver - 8 Channels

Size: A3	Date: 2026-09-19	**Rev: B**
KiCad E.D.A. 10.0.0		Id: 4/12

BUMPER COIL 1 check label

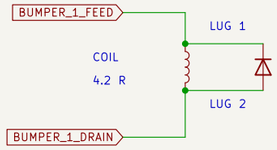

BUMPER COIL 2 check label

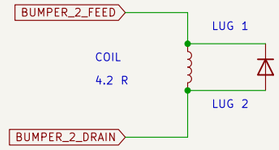

BUMPER COIL 3 check label

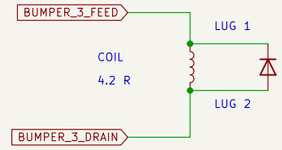

FLIPPER COIL FLIPPER L FL-11722 / 50 V

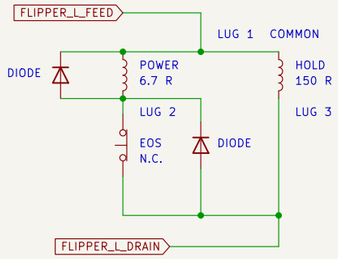

FLIPPER COIL FLIPPER R FL-11722 / 50 V

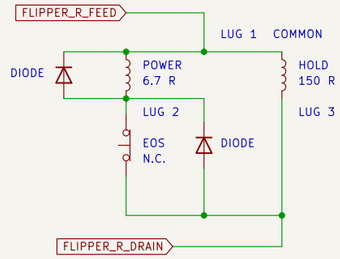

COILS AS FITTED (2026-10-29): flippers, pops 1–3 and slings, on driver channels 1–5, 7 and 8 (channel 6 spare). A 1N4004 across each coil, band to the 48 V lug (FEED).

SLING L AE-26-1200 (A-17811)

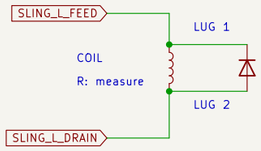

SLING R AE-26-1200 (A-17811)

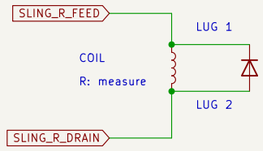

Pinball Machine Capstone

Sheet: /Playfield Wiring – Coils and Diodes/
File: solenoid-wiring.kicad_sch

Title: Playfield Wiring – Coils and Diodes

Size: A3	Date: 2026-09-09	**Rev: A**
KiCad E.D.A. 10.0.0		Id: 5/12

5 V DISTRIBUTION — LED supply PS2 (Mean Well LRS-150F-5, 5 V 22 A)

PS2 return is the logic ground (MCU_GND), shared with the Mega, the Teensy, the PC (via USB) and the LED strips.

The 48 V coil circuit (SOLENOID_GND) stays isolated; the driver-board optocouplers are the only link.

The Mega and Teensy are powered by the PC over USB, so nothing here back-feeds a USB port.

Wire: 14 AWG from PS2 to F11 and the bus; 18 AWG for each branch. F12–F17 are ATO blades in the 6-way block (N34); F11 a 20 A ATO inline (N57).

LED_INJ1 feeds the pixel chain's first pixel, LED_INJ2 its half way point; LED_INJ3–4 spare. 470 uF 16 V across 5 V/GND at each feed.

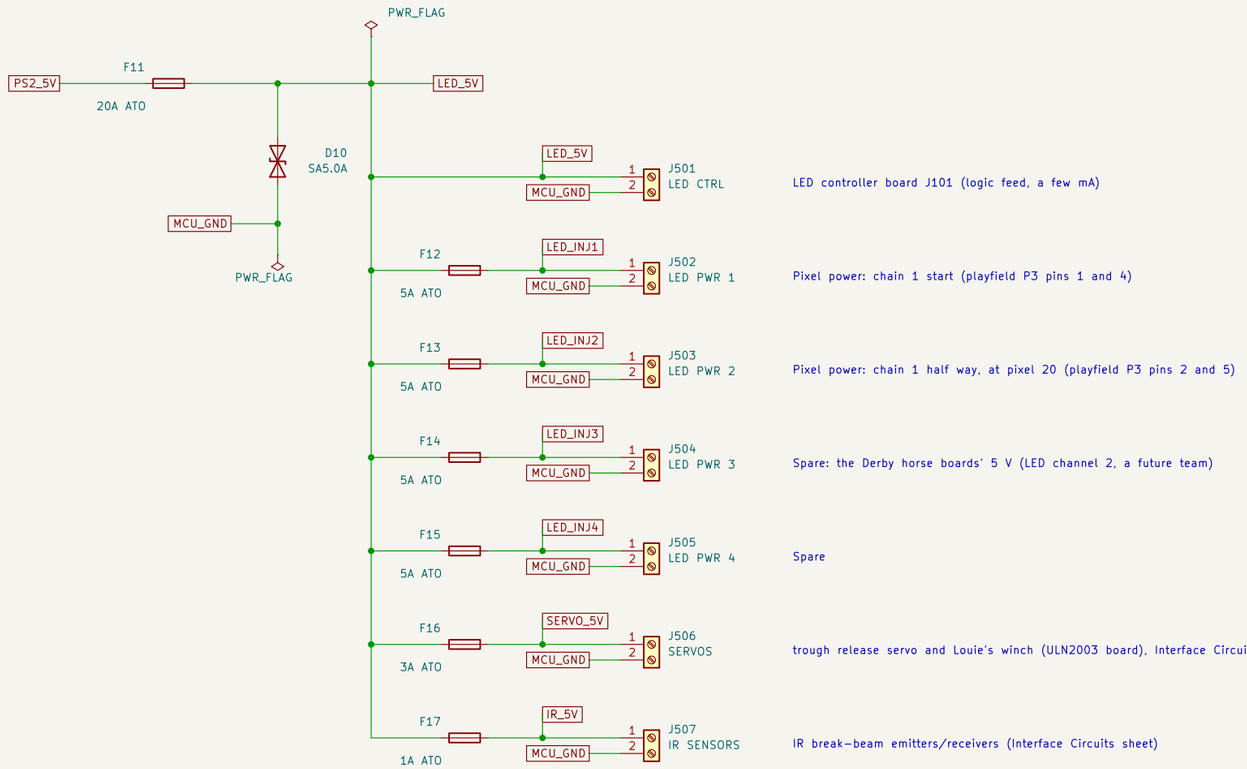

Replaces Rev A (RS-15-5 feeding Mega, DFPlayer, LCD)
LRS-150F-5 feeds LEDs, servos and IR sensors through branch fuses

Pinball Machine Capstone

Sheet: /5 V Distribution/
File: power-5v.kicad_sch

Title: 5 V Distribution

Size: A3	Date: 2026-09-19	**Rev: B**
KiCad E.D.A. 10.0.0		Id: 7/12

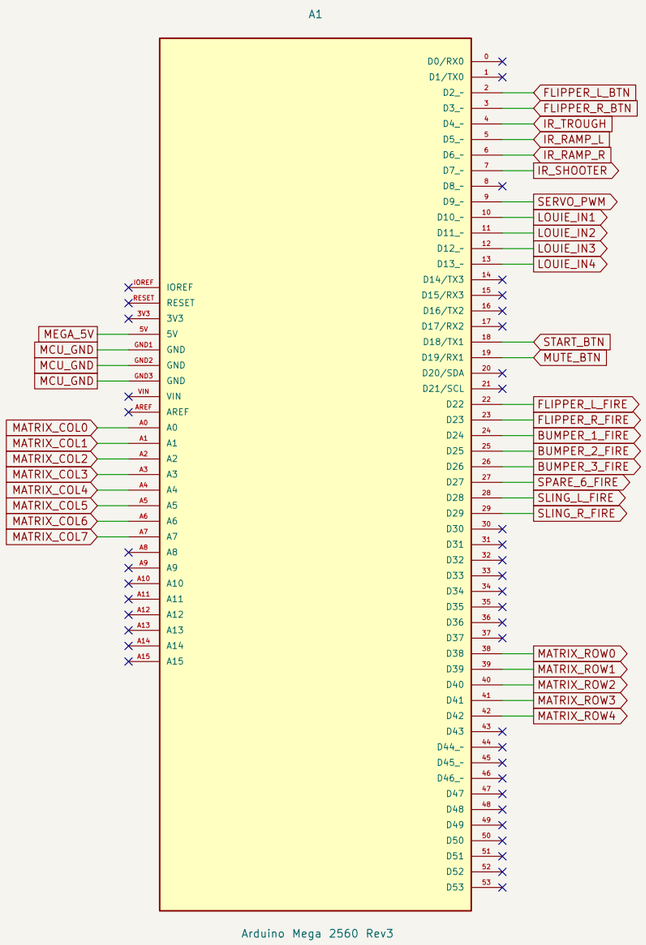

PIN ASSIGNMENT v2 — MPF / LISY I/O controller

PIN	NET	FUNCTION
D2	FLIPPER_L_BTN	left flipper button (INT)
D3	FLIPPER_R_BTN	right flipper button (INT)
D4	IR_TROUGH	trough break-beam
D5	IR_RAMP_L	left ramp made break-beam
D6	IR_RAMP_R	right ramp made break-beam
D7	IR_SHOOTER	shooter lane break-beam
D9	SERVO_PWM	ball trough release servo
D10	LOUIE_IN1	Louie winch stepper IN1 (ULN2003 board)
D11	LOUIE_IN2	Louie winch stepper IN2
D12	LOUIE_IN3	Louie winch stepper IN3
D13	LOUIE_IN4	Louie winch stepper IN4 (also the board LED)
D18	START_BTN	start button (INT)
D19	MUTE_BTN	mute button (INT)
D22	FLIPPER_L_FIRE	coil 1 flipper_l (driver channel 1)
D23	FLIPPER_R_FIRE	coil 2 flipper_r
D24	BUMPER_1_FIRE	coil 3 bumper_1
D25	BUMPER_2_FIRE	coil 4 bumper_2
D26	BUMPER_3_FIRE	coil 5 bumper_3
D27	SPARE_6_FIRE	coil 6 spare (driver channel 6)
D28	SLING_L_FIRE	coil 7 sling_l
D29	SLING_R_FIRE	coil 8 sling_r (driver channel 8)
D38	MATRIX_ROW0	switch matrix row 0 (strobe)
D39	MATRIX_ROW1	switch matrix row 1 (strobe)
D40	MATRIX_ROW2	switch matrix row 2 (strobe)
D41	MATRIX_ROW3	switch matrix row 3 (strobe)
D42	MATRIX_ROW4	switch matrix row 4 (strobe)
A0	MATRIX_COL0	switch matrix column 0 (INPUT_PULLUP)
A1	MATRIX_COL1	switch matrix column 1 (INPUT_PULLUP)
A2	MATRIX_COL2	switch matrix column 2 (INPUT_PULLUP)
A3	MATRIX_COL3	switch matrix column 3 (INPUT_PULLUP)
A4	MATRIX_COL4	switch matrix column 4 (INPUT_PULLUP)
A5	MATRIX_COL5	switch matrix column 5 (INPUT_PULLUP)
A6	MATRIX_COL6	switch matrix column 6 (INPUT_PULLUP)
A7	MATRIX_COL7	switch matrix column 7 (INPUT_PULLUP)
GND1	MCU_GND	logic ground

D0/D1: USB serial to the game PC (LISY); the Mega is powered from that USB port (5V pin unused). Unlisted pins are spare.

Coil FIRE outputs drive the TLP291 LEDs on the driver boards through 680R; HIGH = coil on.

Switch matrix: rows strobed LOW one at a time, columns read with INPUT_PULLUP, 1N4148 at each switch.

Pinball Machine Capstone

Sheet: /Arduino Mega 2560 – Pin Assignment/

File: solenoid-mcu.kicad_sch

Title: Arduino Mega 2560 – Pin Assignment (v2)

Size: A3	Date: 2026-09-09	**Rev: B**
KiCad E.D.A. 10.0.0		Id: 8/12

BUILT AS THE MEGA I/O SHIELD (its own sheet; Altium CAD/pcb/Mega-IO-Shield): J201 switch matrix, J202 sensors, J203 buttons, J204 winch, J205 driver board P1. The IR receivers' 4.7k pull-ups are its R201-R204.

DIRECT INPUTS (Mega pin beside each): INPUT_PULLUP in firmware, each switch closes to MCU_GND. All other playfield switches are on the switch matrix.

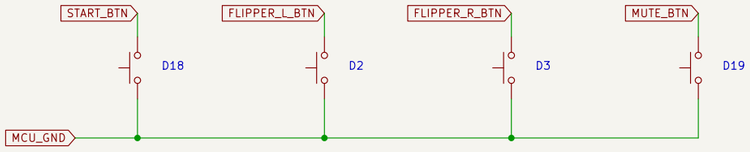

IR BREAK-BEAM trough (D4)

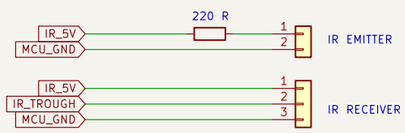

open-collector output

IR BREAK-BEAM left ramp made (D5)

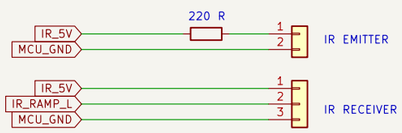

open-collector output

IR BREAK-BEAM right ramp made (D6)

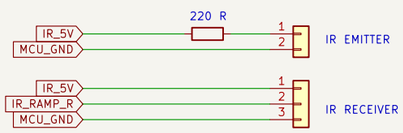

open-collector output

IR BREAK-BEAM shooter lane (D7)

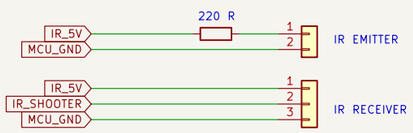

open-collector output

TROUGH RELEASE SERVO (D9)

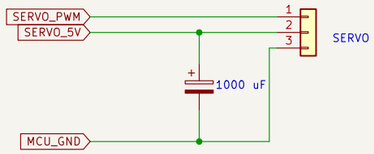

LOUIE WINCH ULN2003 driver board (D10-D13)



The 28BYJ-48 stepper plugs into the ULN2003 board (5-pin JST).

Motor power from SERVO_5V (3 A fused, 5 V Distribution sheet).

Home position: the LOUIE_HOME microswitch on the switch matrix (34).

Pinball Machine Capstone

Sheet: /Arduino Interface Circuits/

File: solenoid-io.kicad_sch

Title: Arduino Interface Circuits

Size: A3	Date: 2026-09-10	**Rev: A**
KiCad E.D.A. 10.0.0		Id: 9/12

LED CONTROLLER — Teensy 4.1 drives 2 WS2812B channels (channel 2 spare); the Mega never touches the LEDs

USB from the game PC powers the Teensy and carries LED frames (MPF Open Pixel Control -> bridge program -> USB serial).

Channel 1 = pin 2 (the playfield inserts), channel 2 = pin 14 (spare, for the Derby horse boards). 74AHCT125 shifts 3.3 V data to 5 V; 330R series resistor per line. Buffers C and D unused: inputs grounded, outputs off.

Teensy VIN is left unconnected (USB power only), so the 5 V LED supply can never back-feed the PC's USB port.

J101 is the board's own 5 V logic feed (LED_5V, 5 V Distribution sheet). C101 470 uF 16 V (Panasonic EEU-FR1C471). Plugs are Molex KK: J101 KK 396 2-pin, J102 and J103 KK 254 2-pin.

Channel plugs carry DATA + GND only. LED power comes from LED_INJ1-2 on the 5 V Distribution sheet, not through this board.

Channel plan: 1 the playfield inserts (40 pixels, CAD/print/led_chain.csv); 2 spare (the Derby horse boards, 72 LEDs, with their own 5 V feed).

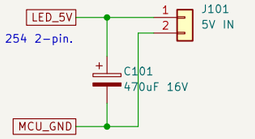

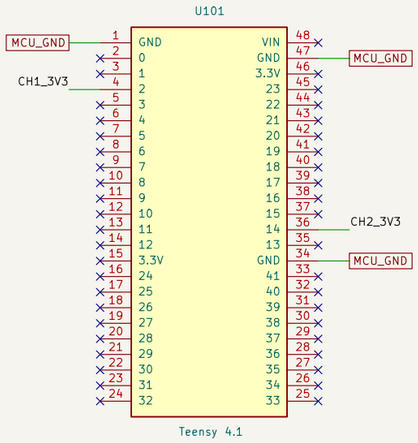

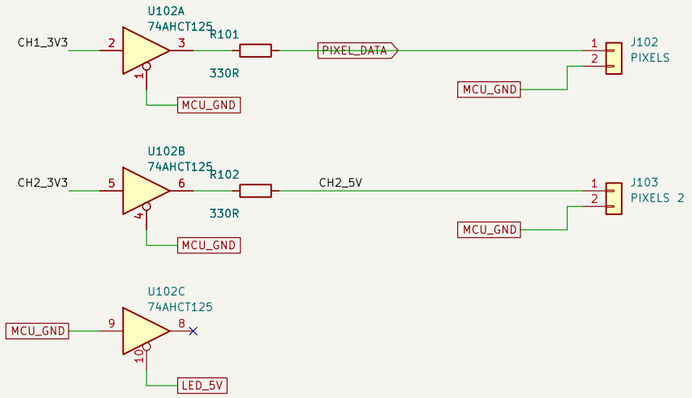

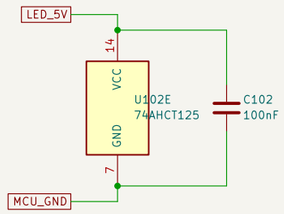

WIRING EXAMPLE — the first three pixels of LED chain 1 (on the playfield, not on this board)

Data: J102 pin 1 (PIXEL_DATA, after R101) to DIN of the first pixel; each DOUT to the next pixel's DIN, in a line.

Power: every pixel's VDD to LED_INJ1 (5 V, 5 A fused, 5 V Distribution sheet) and VSS to ground. Ground also runs back to J102 pin 2, so data and power share one reference. Inject 5 V again half way along (pixel 20).

Each pixel board carries its own 100 nF decoupling capacitor. Channel 2 (J103) is wired the same way.

Wires: three per hop (5 V, data, ground), ~22 AWG, a different colour each; 18 AWG for the 5 V injection runs.

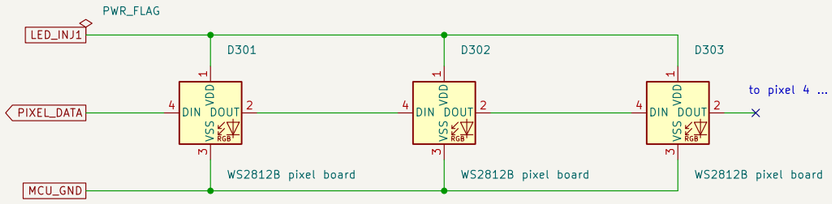

Logic-side board: MCU_GND is shared with the Mega, PC and 5 V supply

Teensy 4.1 + 74AHCT125, 2 WS2812B channels (2 spare)

Pinball Machine Capstone

Sheet: /LED Controller/

File: led-controller.kicad_sch

Title: LED Controller

Size: A3	Date: 2026-09-19	**Rev: B**
KiCad E.D.A. 10.0.0		Id: 11/12